Formulate:
HC6, Horizontal Curve Wall

Total Graphic Area: 127.125”w X 95.5”h
Total Visual Area: 123.125”w X 91.5”h

Please be sure to include the 2” bleed around the perimeter (note trim & stitch locations on template). DO NOT design any critical elements (text, logos, etc.) within 2” of the edge.

Use separate template for accent 04 graphic panels. The drawing only represents placement/obstruction on this template.

Please consider obstructions such as shelf unit when laying out your graphics.

The monitor mount can be mounted on the left or right side of the frame.

General Art Guidelines:

- CMYK Color Mode
- All Solid Coated Pantone colors should be called out in the art as spot colors
- Embed all images and support files
- Resolution must be 100-120 ppi
- All fonts must be created to outlines
- Do not scale artboard
- Background color/images must bleed to the edge of artboard
- Do not use spot colors from template in your artwork as they will not print

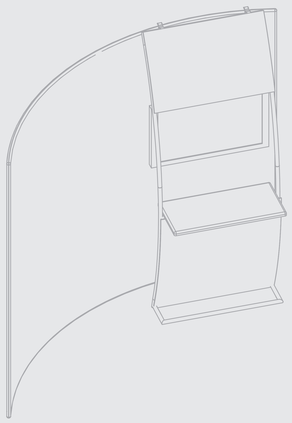

bleed area
trim line
safe zone

REPRESENTS
PLACEMENT ONLY

DO NOT DESIGN ACCENT
ARTWORK ON THIS TEMPLATE

PLEASE DESIGN ACCENT ARTWORK
ON THE SEPARATE ACCENT 04 TEMPLATE

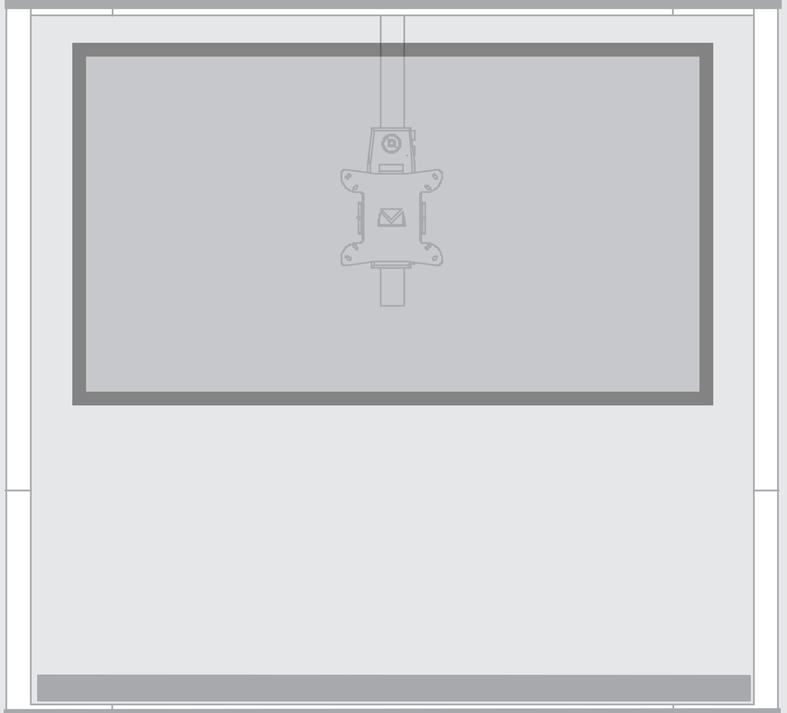

REPRESENTS
PLACEMENT ONLY

DO NOT DESIGN ACCENT
ARTWORK ON THIS TEMPLATE

PLEASE DESIGN ACCENT ARTWORK
ON THE SEPARATE ACCENT 04 TEMPLATE

Formulate:
Accent 04

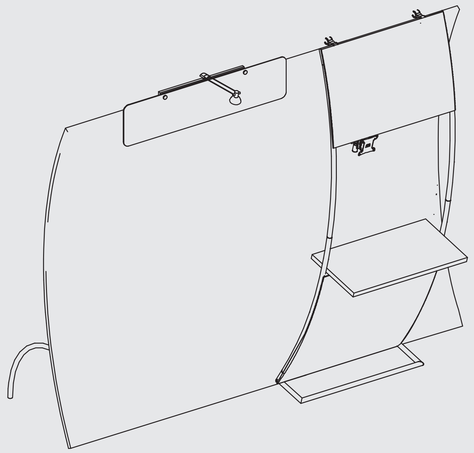

TOP
Total Graphic Area: 41.4”w X 28.5”h
Total Visual Area: 37.4”w X 24.5”h

BOTTOM
Total Graphic Area: 41.4”w X 42.2”h
Total Visual Area: 37.4”w X 38.2”h

Use separate template for formulate backwall graphic. This template only represents the accent graphics.

Please be sure to include the 2” bleed around the perimeter (note trim & stitch locations on template). DO NOT design any critical elements (text, logos, etc.) within 1” of the edge.

General Art Guidelines:

– CMYK Color Mode
– All Solid Coated Pantone colors should be called out in the art as spot colors
– Embed all images and support files
– Resolution must be 100-120 ppi
– All fonts must be created to outlines
– Do not scale artboard
– Background color/images must bleed to the edge of artboard
– Do not use spot colors from template in your artwork as they will not print

TOP

BOTTOM

bleed area

trim line

safe zone